# AUTEXIER

MANUFACTURER OF INDUSTRIAL VALVES

93 Rue Louis Blanc - 02300 CHAUNY - FRANCE
Phone : +33 (0)3 23 52 02 86 Fax : +33 (0)3 23 39 52 28
Website : www.autexier.fr




# ALUMINIUM BRONZE BUTTERFLY VALVE Ref. AU602MØ

**SERIES :**
- AU602

*For material compatibility, contact us*

CE



***Subject to modifications***

**CARACTERISTICS :**
- PN16 (Nominal Pressure)
- JUNCTION : ISO PN10 / PN16
- MATERIAL : ALUMINIUM BRONZE CC333G

**MAXIMUM CONDITIONS OF USE :**
- 16 bar of -10°C to 100°C

**APPLICATIONS :**
- Water-based fluids
- Water
- Seawater

**OPTIONS :**
- EPDM, FPM or NBR Cuff
- Junction ISO PN20 (ANSI Cl. 150)

*Specific dimensions, contact us*

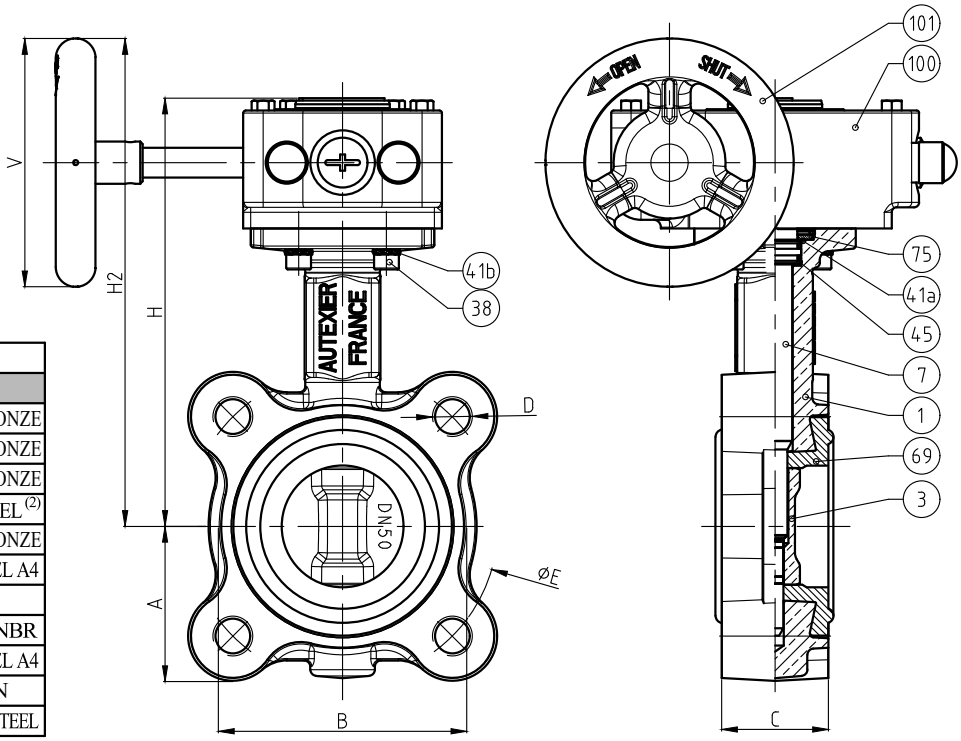


| NOMENCLATURE | | | |
|---|---|---|---|
| Rep | Qty | Designation | Material |
| 1 | 1 | BODY | ALUMINIUM BRONZE |
| 3 | 1 | WEDGE DISC | ALUMINIUM BRONZE |
| 7 | 1 | STEM | ALUMINIUM BRONZE |
| 38 | 4 | SCREW | STAINLESS STEEL (2) |
| 41a | 1 | WASHER | ALUMINIUM BRONZE |
| 41b | 4 | WASHER | STAINLESS STEEL A4 |
| 45 | 2 | O-RING | FPM |
| 69 | 1 | CUFF | EPDM / FPM / NBR |
| 75 | 1 | HOUSING RINGS | STAINLESS STEEL A4 |
| 100 | 1 | GEARBOX | CAST IRON |
| 101 | 1 | HANDWHEEL | EPOXY COATED STEEL |

| DIMENSIONS | | | | |
|---|---|---|---|---|
| DN | 32 | 40 | 50 | 65 |
| A (mm) | 53 | 56 | 62 | 69 |
| B (mm) | 78 | 85 | 105 | 108 |
| C (mm) | 33 | 33 | 43 | 46 |
| D (mm) | 4×M16 | 4×M16 | 4×M16 | 4×M16 |
| E (mm) | 100 | 110 | 125 | 145 |
| H (mm) | 160 | 163 | 173 | 188 |
| H2 (mm) | 184 | 187 | 197 | 212 |
| V (mm) | 100 | 100 | 100 | 100 |
| Base ISO | F05 | F05 | F05 | F05 |
| Maximum torque (N.m) | 12 | 15 | 17 | 25 |
| Weight (Kg) | 4.600 | 4.750 | 5.600 | 6.160 |

**REFERENCES NORMS :**
- Material : NF EN 1982 - NF EN 12163 - NF EN 12164 - NF EN 10272
- Testing & checking : NF EN 12266-1/-2 (bench test)
- Face-to-face : NF EN 558 - Series 20
- Shell design strengh : NF EN 12516-3 V2003
- Stainless steel fasteners : (1) NF EN ISO 3506-1/-2 (A4-70) or NF EN 10269 (1.4404 or 1.4401) / (2) STAINLESS STEEL A4-70 or its equivalent

Ref. instruction of assembling : 0904DA113E
Ref. instruction of operation : 0904DA114E
***Mounting & assembly guides are available on our website.***


*These data are for information and can be modified without notice. It is not up to us to appreciate specifications. It is up to the customer to verify the adequacy between the equipment choosen and the real conditions of use.*

# AUTEXIER

MANUFACTURER OF INDUSTRIAL VALVES

93 Rue Louis Blanc - 02300 CHAUNY - FRANCE
Phone : +33 (0)3 23 52 02 86 Fax : +33 (0)3 23 39 52 28
Website : www.autexier.fr




# ALUMINIUM BRONZE BUTTERFLY VALVE Ref. AU602MØ

**SERIES :**
- AU602

*For material compatibility, contact us*

**CARACTERISTICS :**
- PN16 / PN10 (Nominal Pressure)
- JUNCTION : ISO PN10 / PN16
- MATERIAL : ALUMINIUM BRONZE CC333G

**MAXIMUM CONDITIONS OF USE :**
- 16 bar of -10°C to 100°C
- 10 bar of -10°C to 100°C (DN200 & DN250)

**APPLICATIONS :**
- Water-based fluids
- Water
- Seawater

**OPTIONS :**
- EPDM, FPM or NBR Cuff
- Junction ISO PN20 (ANSI Cl 150)

*Specific dimensions, contact us*



***Subject to modifications***

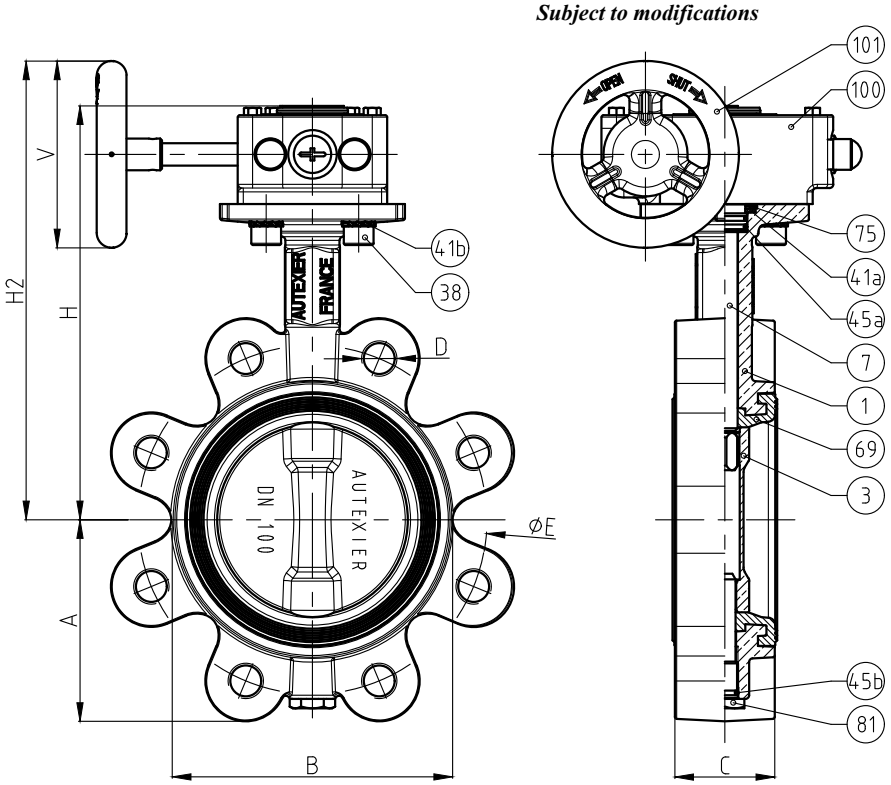


| NOMENCLATURE | | | |
|---|---|---|---|
| Rep | Qty | Designation | Material |
| 1 | 1 | BODY | ALUMINIUM BRONZE |
| 3 | 1 | WEDGE DISC | ALUMINIUM BRONZE |
| 7 | 1 | STEM | ALUMINIUM BRONZE |
| 38 | 4 | SCREW | STAINLESS STEEL (2) |
| 41a | 1 | WASHER | ALUMINIUM BRONZE |
| 41b | 4 | WASHER | STAINLESS STEEL A4 |
| 45a | 2 | O-RING | FPM |
| 45b | 1 | O-RING | FPM |
| 69 | 1 | CUFF | EPDM / FPM / NBR |
| 75 | 1 | HOUSING RINGS | STAINLESS STEEL A4 |
| 81 | 1 | AXIS | ALUMINIUM BRONZE |
| 100 | 1 | GEARBOX | CAST IRON |
| 101 | 1 | HANDWHEEL | EPOXY COATED STEEL |

| DIMENSIONS | | | | | | |
|---|---|---|---|---|---|---|
| DN | 80 | 100 | 125 | 150 | 200 | 250 |
| A (mm) | 95 | 103 | 117 | 133 | 170 | 208 |
| B (mm) | 129 | 150 | 183 | 210 | 257 | 330 |
| C (mm) | 46 | 52 | 56 | 56 | 60 | 68 |
| D (mm) | 8×M16 | 8×M16 | 8×M16 | 8×M20 | 12×M20 | 12×M24 |
| E (mm) | 160 | 180 | 210 | 240 | 295 | 355 |
| H (mm) | 212 | 222 | 235 | 247 | 304 | 351 |
| H2 (mm) | 235 | 245 | 258 | 270 | 328 | 471 |
| V (mm) | 100 | 125 | 125 | 160 | 160 | 200 |
| Base ISO | F07 | F07 | F07 | F07 | F07 | F10 |
| Maximum torque (N.m) | 28 | 50 | 85 | 110 | 140 | 270 |
| Weight (Kg) | 8.500 | 9.550 | 11.950 | 14.100 | 18.900 | 36.000 |

**REFERENCES NORMS :**
- Material : NF EN 1982 - NF EN 12163 - NF EN 12164 - NF EN 10272
- Testing & checking : NF EN 12266-1/-2 (bench test)
- Face-to-face : NF EN 558 - Series 20
- Shell design strengh : NF EN 12516-3 V2003
- Stainless steel fasteners : (1) NF EN ISO 3506-1/-2 (A4-70) or NF EN 10269 (1.4404 or 1.4401) / (2) STAINLESS STEEL A4-70 or its equivalent

Ref. instruction of assembling : 0904DA113E
Ref. instruction of operation : 0904DA114E
***Mounting & assembly guides are available on our website.***


*These data are for information and can be modified without notice. It is not up to us to appreciate specifications. It is up to the customer to verify the adequacy between the equipment choosen and the real conditions of use.*