AUTEXIER

MANUFACTURER OF INDUSTRIAL VALVES

93 Rue Louis Blanc - 02300 CHAUNY - FRANCE
Phone : +33 (0)3 23 52 02 86 Fax : +33 (0)3 23 39 52 28
Website : www.autexier.fr

Ref. AU602 Family : 47

Rev. 03

Date : 04 Nov. 2026

Page 1/2

ALUMINIUM BRONZE BUTTERFLY VALVE Ref. AU602MØ

SERIES :
- AU602

For material compatibility, contact us

CARACTERISTICS :
- PN16 (Nominal Pressure)
- JUNCTION : ISO PN20 (ANSI Cl. 150)
- MATERIAL : ALUMINIUM BRONZE CC333G

MAXIMUM CONDITIONS OF USE :
- 16 bar of -10°C to 100°C

APPLICATIONS :
- Water-based fluids
- Water
- Seawater

OPTIONS :
- EPDM, FPM or NBR Cuff

Specific dimensions, contact us



Subject to modifications

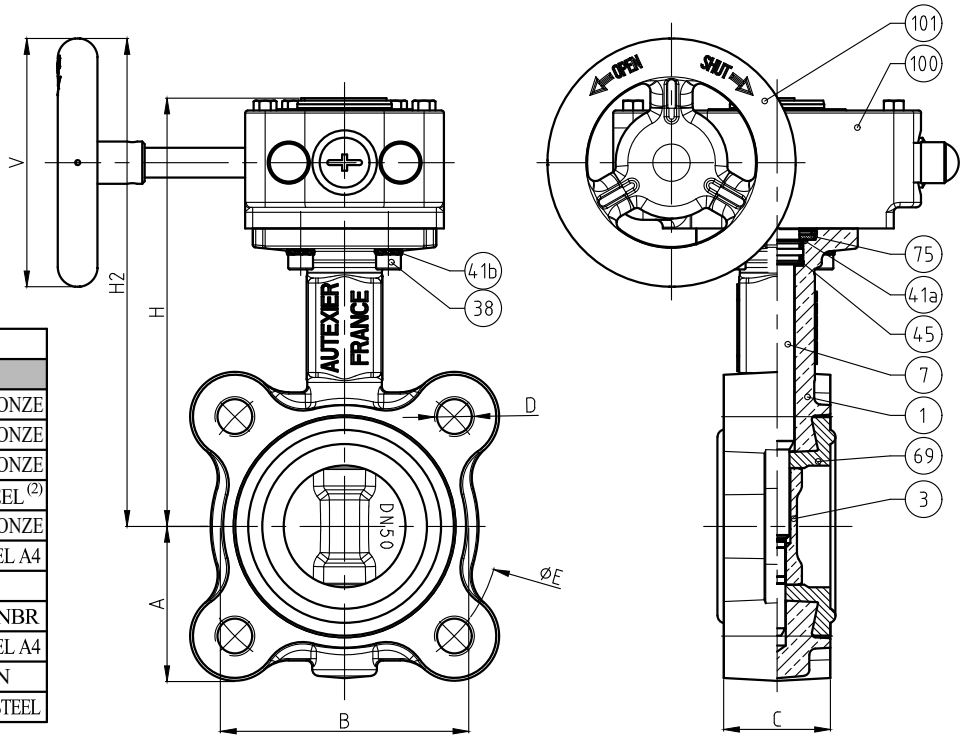

NOMENCLATURE			
Rep	Qty	Designation	Material
1	1	BODY	ALUMINIUM BRONZE
3	1	WEDGE DISC	ALUMINIUM BRONZE
7	1	STEM	ALUMINIUM BRONZE
38	4	SCREW	STAINLESS STEEL (2)
41a	1	WASHER	ALUMINIUM BRONZE
41b	4	WASHER	STAINLESS STEEL A4
45	2	O-RING	FPM
69	1	CUFF	EPDM / FPM / NBR
75	1	HOUSING RINGS	STAINLESS STEEL A4
100	1	GEARBOX	CAST IRON
101	1	HANDWHEEL	EPOXY COATED STEEL

DIMENSIONS				
DN	32	40	50	65
A (mm)	53	56	62	69
B (mm)	78	85	105	108
C (mm)	33	33	43	46
D (mm)	4×M14	4×M14	4×M16	4×M16
E (mm)	88.9	98.4	120.6	139.7
H (mm)	160	163	173	188
H2 (mm)	184	187	197	212
V (mm)	100	100	100	100
Base ISO	F05	F05	F05	F05
Maximum torque (N.m)	12	15	17	25
Weight (Kg)	4.600	4.750	5.600	6.160

REFERENCES NORMS :
- Material : NF EN 1982 - NF EN 12163 - NF EN 12164 - NF EN 10272
- Testing & checking : NF EN 12266-1/-2 (bench test)
- Face-to-face : NF EN 558 - Series 20
- Shell design strengh : NF EN 12516-3 V2003
- Stainless steel fasteners : (1) NF EN ISO 3506-1/-2 (A4-70) or NF EN 10269 (1.4404 or 1.4401) / (2) STAINLESS STEEL A4-70 or its equivalent

Ref. instruction of assembling : 0904DA113E
Ref. instruction of operation : 0904DA114E
Mounting & assembly guides are available on our website.

These data are for information and can be modified without notice. It is not up to us to appreciate specifications. It is up to the customer to verify the adequacy between the equipment choosen and the real conditions of use.

AUTEXIER

MANUFACTURER OF INDUSTRIAL VALVES

93 Rue Louis Blanc - 02300 CHAUNY - FRANCE
Phone : +33 (0)3 23 52 02 86 Fax : +33 (0)3 23 39 52 28
Website : www.autexier.fr

ALUMINIUM BRONZE BUTTERFLY VALVE Ref. AU602MØ

SERIES :
- AU602

For material compatibility, contact us

CARACTERISTICS :
- PN16 / PN10 (Nominal Pressure)
- JUNCTION : ISO PN20 (ANSI Cl. 150)
- MATERIAL : ALUMINIUM BRONZE CC333G

MAXIMUM CONDITIONS OF USE :
- 16 bar of -10°C to 100°C
- 10 bar of -10°C to 100°C (DN200 & DN250)

APPLICATIONS :
- Water-based fluids
- Water
- Seawater

OPTIONS :
- EPDM, FPM or NBR Cuff

Specific dimensions, contact us



Subject to modifications

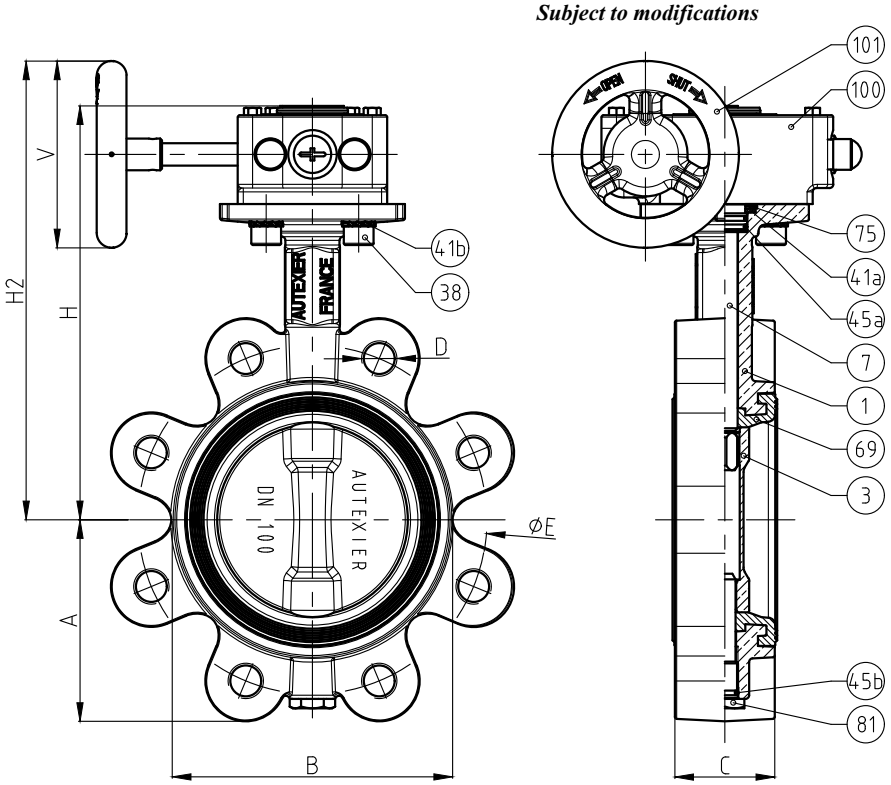

NOMENCLATURE			
Rep	Qty	Designation	Material
1	1	BODY	ALUMINIUM BRONZE
3	1	WEDGE DISC	ALUMINIUM BRONZE
7	1	STEM	ALUMINIUM BRONZE
38	4	SCREW	STAINLESS STEEL (2)
41a	1	WASHER	ALUMINIUM BRONZE
41b	4	WASHER	STAINLESS STEEL A4
45a	2	O-RING	FPM
45b	1	O-RING	FPM
69	1	CUFF	EPDM / FPM / NBR
75	1	HOUSING RINGS	STAINLESS STEEL A4
81	1	AXIS	ALUMINIUM BRONZE
100	1	GEARBOX	CAST IRON
101	1	HANDWHEEL	EPOXY COATED STEEL

DIMENSIONS						
DN	80	100	125	150	200	250
A (mm)	95	103	117	133	170	208
B (mm)	129	150	183	210	257	330
C (mm)	46	52	56	56	60	68
D (mm)	4×M16	8×M16	8×M20	8×M20	8×M20	12×M24
E (mm)	152.4	190.5	215.9	241.3	298.4	362
H (mm)	212	222	235	247	304	351
H2 (mm)	235	245	258	270	328	471
V (mm)	100	100	100	160	160	200
Base ISO	F07	F07	F07	F07	F07	F10
Maximum torque (N.m)	28	50	85	110	140	270
Weight (Kg)	8.500	9.550	11.950	14.100	18.900	36.000

REFERENCES NORMS :
- Material : NF EN 1982 - NF EN 12163 - NF EN 12164 - NF EN 10272
- Testing & checking : NF EN 12266-1/-2 (bench test)
- Face-to-face : NF EN 558 - Series 20
- Shell design strengh : NF EN 12516-3 V2003
- Stainless steel fasteners : (1) NF EN ISO 3506-1/-2 (A4-70) or NF EN 10269 (1.4404 or 1.4401) / (2) STAINLESS STEEL A4-70 or its equivalent

Ref. instruction of assembling : 0904DA113E
Ref. instruction of operation : 0904DA114E
Mounting & assembly guides are available on our website.

These data are for information and can be modified without notice. It is not up to us to appreciate specifications. It is up to the customer to verify the adequacy between the equipment choosen and the real conditions of use.