AUTEXIER

MANUFACTURER OF INDUSTRIAL VALVES

93 Rue Louis Blanc - 02300 CHAUNY - FRANCE
Phone : +33 (0)3 23 52 02 86 Fax : +33 (0)3 23 39 52 28
Website : www.autexier.fr

BRONZE BUTTERFLY VALVE Ref. A602MØ

SERIES :
- A602

For material compatibility, contact us

CARACTERISTICS :
- PN16 (Nominal Pressure)
- JUNCTION : ISO PN10 / PN16
- MATERIAL : BRONZE CC491K

MAXIMUM CONDITIONS OF USE :
- 16 bar of -15°C to 100°C

APPLICATIONS :
- Water-based fluids
- Water

OPTIONS :
- EPDM, FPM or NBR Cuff
- Junction ISO PN20 (ANSI Cl 150)

Specific dimensions, contact us



Subject to modifications
Photo for information only

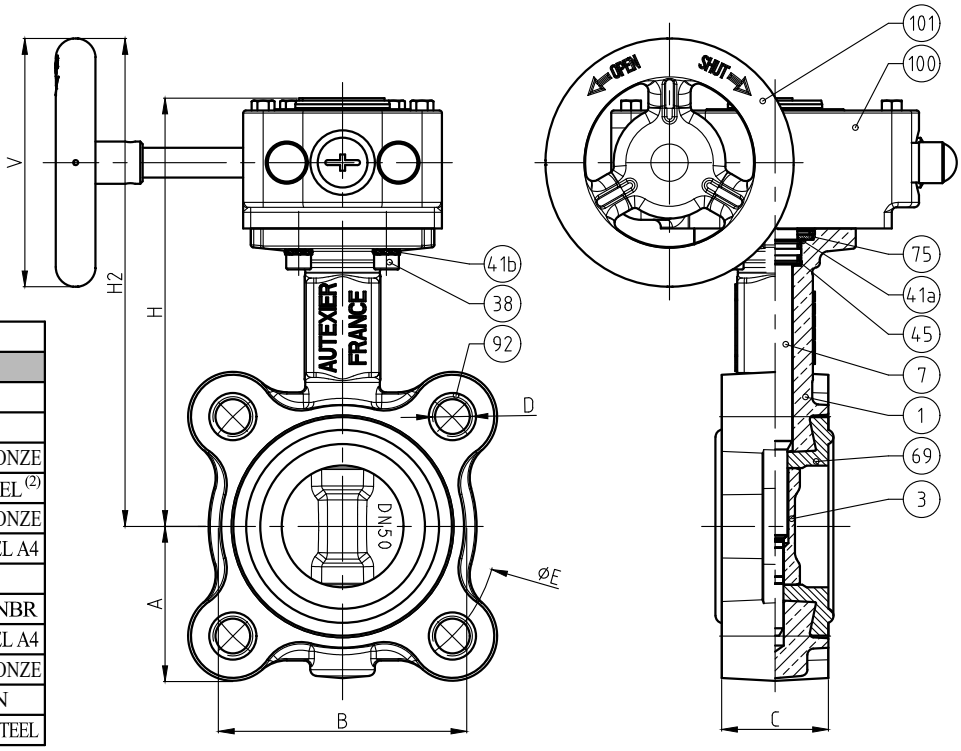

NOMENCLATURE			
Rep	Qty	Designation	Material
1	1	BODY	BRONZE
3	1	WEDGE DISC	BRONZE
7	1	STEM	ALUMINIUM BRONZE
38	4	SCREW	STAINLESS STEEL (2)
41a	1	WASHER	ALUMINIUM BRONZE
41b	4	WASHER	STAINLESS STEEL A4
45	2	O-RING	FPM
69	1	CUFF	EPDM / FPM / NBR
75	1	HOUSING RINGS	STAINLESS STEEL A4
92	4	INSERT	ALUMINIUM BRONZE
100	1	GEARBOX	CAST IRON
101	1	HANDWHEEL	EPOXY COATED STEEL

DIMENSIONS				
DN	32	40	50	65
A (mm)	53	56	62	69
B (mm)	78	85	105	108
C (mm)	33	33	43	46
D (mm)	4×M16	4×M16	4×M16	4×M16
E (mm)	100	110	125	145
H (mm)	160	163	173	188
H2 (mm)	184	187	197	212
V (mm)	100	100	100	100
Base ISO	F05	F05	F05	F05
Maximum torque (N.m)	12	15	17	25
Weight (Kg)	--	--	--	--

REFERENCES NORMS :
- Material : NF EN 1982 - NF EN 12163 - NF EN 12164 - NF EN 10272
- Testing & checking : NF EN 12266-1/-2 (bench test)
- Face-to-face : NF EN 558 - Series 20
- Shell design strengh : NF EN 12516-3 V2003
- Stainless steel fasteners : (1) NF EN ISO 3506-1/-2 (A4-70) or NF EN 10269 (1.4404 or 1.4401) / (2) STAINLESS STEEL A4-70 or its equivalent

Ref. instruction of assembling : 0904DA113E
Ref. instruction of operation : 0904DA114E
Mounting & assembly guides are available on our website.

These data are for information and can be modified without notice. It is not up to us to appreciate specifications. It is up to the customer to verify the adequacy between the equipment choosen and the real conditions of use.

AUTEXIER

MANUFACTURER OF INDUSTRIAL VALVES

93 Rue Louis Blanc - 02300 CHAUNY - FRANCE
Phone : +33 (0)3 23 52 02 86 Fax : +33 (0)3 23 39 52 28
Website : www.autexier.fr

BRONZE BUTTERFLY VALVE Ref. A602MØ

SERIES :
- A602

For material compatibility, contact us

CARACTERISTICS :
- PN16 / PN10 (Nominal Pressure)
- JUNCTION : ISO PN10 / PN16
- MATERIAL : BRONZE CC491K

MAXIMUM CONDITIONS OF USE :
- 16 bar of -15°C to 100°C
- 10 bar of -15°C to 100°C (DN200 & DN250)

APPLICATIONS :
- Water-based fluids
- Water

OPTIONS :
- EPDM, FPM or NBR Cuff
- Junction ISO PN20 (ANSI Cl. 150)

Specific dimensions, contact us



Subject to modifications
Photo for information only

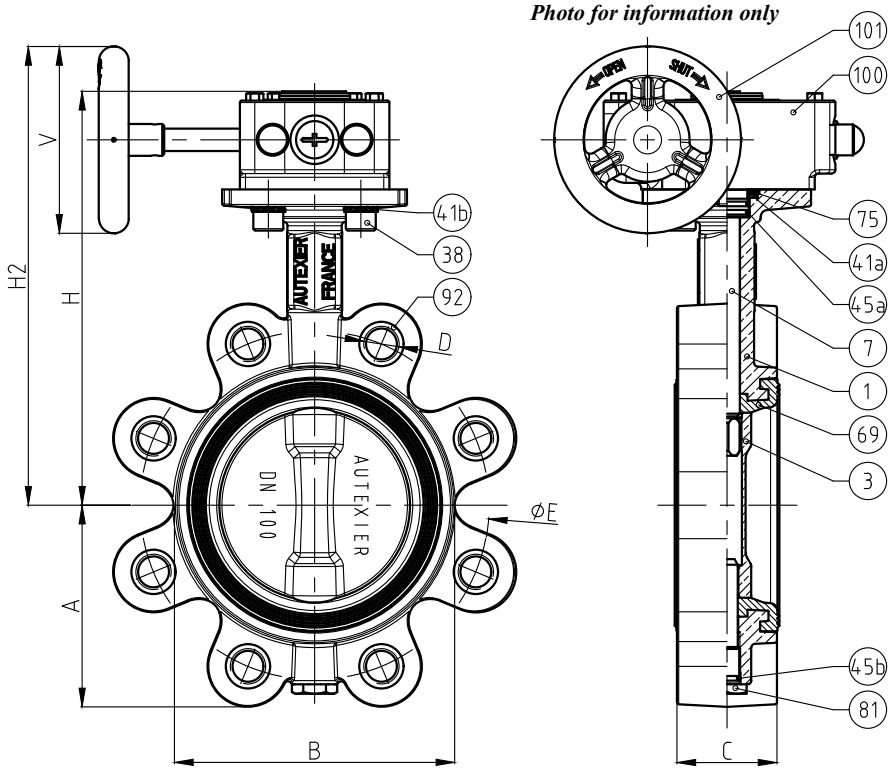

NOMENCLATURE			
Rep	Qty	Designation	Material
1	1	BODY	BRONZE
3	1	WEDGE DISC	BRONZE
7	1	STEM	ALUMINIUM BRONZE
38	4	SCREW	STAINLESS STEEL (2)
41a	1	WASHER	ALUMINIUM BRONZE
41b	4	WASHER	STAINLESS STEEL A4
45a	3	O-RING	FPM
45b	3	O-RING	FPM
69	1	CUFF	EPDM / FPM / NBR
75	1	HOUSING RINGS	STAINLESS STEEL A4
81	1	AXIS	ALUMINIUM BRONZE
92	n	INSERT	ALUMINIUM BRONZE
100	1	GEARBOX	CAST IRON
101	1	HANDWHEEL	EPOXY COATED STEEL

DIMENSIONS						
DN	80	100	125	150	200	250*
A (mm)	95	103	117	133	170	208
B (mm)	129	150	183	210	257	330
C (mm)	46	52	56	56	60	68
D (mm)	8×M16	8×M16	8×M16	8×M20	12×M20	12×M24
E (mm)	160	180	210	240	295	355
H (mm)	212	222	235	247	304	351
H2 (mm)	235	245	258	270	328	471
V (mm)	100	125	125	160	160	200
n	8	8	8	8	12	12
Base ISO	F07	F07	F07	F07	F07	F10
Maximum torque (N.m)	28	50	85	110	140	270
Weight (Kg)	--	--	--	--	--	--

**Under reserve*

REFERENCES NORMS :
- Material : NF EN 1982 - NF EN 12163 - NF EN 12164 - NF EN 10272
- Testing & checking : NF EN 12266-1/-2 (bench test)
- Face-to-face : NF EN 558 - Series 20
- Shell design strengh : NF EN 12516-3 V2003
- Stainless steel fasteners : (1) NF EN ISO 3506-1/-2 (A4-70) or NF EN 10269 (1.4404 or 1.4401) / (2) STAINLESS STEEL A4-70 or its equivalent

Ref. instruction of assembling : 0904DA113E
Ref. instruction of operation : 0904DA114E
Mounting & assembly guides are available on our website.

These data are for information and can be modified without notice. It is not up to us to appreciate specifications. It is up to the customer to verify the adequacy between the equipment choosen and the real conditions of use.