AUTEXIER

MANUFACTURER OF INDUSTRIAL VALVES

93 Rue Louis Blanc - 02300 CHAUNY - FRANCE
Phone : +33 (0)3 23 52 02 86 Fax : +33 (0)3 23 39 52 28
Website : www.autexier.fr

BRONZE SAFETY VALVE WITH FLANGES

Ref. 378.Ø / 378BPØ / 378TØ / 378MØ

SERIES :
- 378.Ø : FPM Disc
- 378BPØ : Silicone Disc (low pressure)
- 378TØ : PTFE Disc
- 378MØ : Metal Disc
- With handlever

For material compatibility, contact us

CARACTERISTICS :
- PN40 (Nominal Pressure)
- ENDS : ISO PN16 flanges
- MATERIAL : BRONZE CC491K

MAXIMUM CONDITIONS OF USE :
- Ref. 378.Ø : 40 bar of -15°C to 200°C
- Ref. 378BPØ : 40 bar of -50°C to 200°C
- Ref. 378TØ : 40 bar of -50°C to 225°C
- Ref. 378MØ : 40 bar of -50°C to 225°C

APPLICATIONS :
- Hot water and industrial fluids
- Water-based fluids
- Steam up to 8 bar (FPM)
- Steam 8 to 15 bar (PTFE / Metal)
- Neutral gases (compressed air,...)

OPTIONS :
- Degreased disc
- Special drilling

Specific dimensions, contact us

Subject to modifications

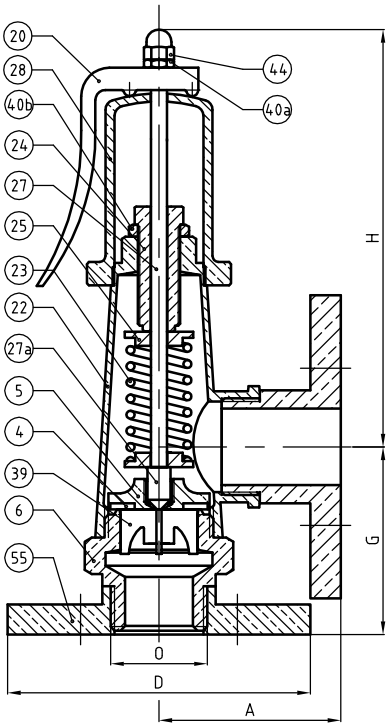

Ref. 378.Ø, 378BPØ and 378TØ
DN40 and DN50

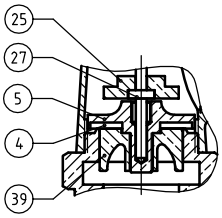

Ref. 378.Ø, 378BPØ and 378TØ
DN65 and DN80

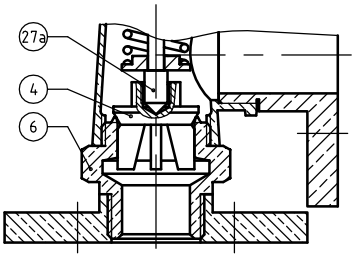

Ref. 378MØ
DN40 to DN65

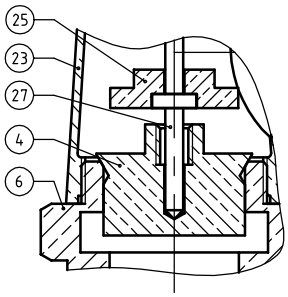

Ref. 378MØ
DN80

NOMENCLATURE			
Rep	Qty	Designation	Material
4	1	DISC	378:FPM / 378BP:Silicone 378T:PTFE / 378M:BRONZE
5	1	DISC HOLDER	BRONZE
6	1	SEAT	BRONZE
20	1	LEVER	BRONZE
22	1	LANTERN	BRONZE
23	1	SPRING	STAINLESS STEEL
24	1	ADJUSTING SCREW	BRASS
25	2	CARRIER	BRASS (DN40/50) / BRONZE (DN 65/80)
27	1	NEDDLE	BRASS
27a	1	NOZZLE	BRASS
28	1	CAP	BRONZE
39	1	FIN	BRONZE
40a	1	NUT	BRASS
40b	1	NUT	BRASS
44	1	CAP NUT	BRASS
55	2	FLANGE	BRONZE

REFERENCES NORMS :
- Material : NF EN 1982 - NF EN 12163 - NF EN 12164 - NF EN 10272
- Testing & checking : NF EN 12266-1/-2 (bench test)
- Face-to-face : NF EN 558 - Series 22 (DN40)
- Face-to-face : NF EN 558 - Series 23 (DN50 to DN80)
- Flanges : NF EN 1092-3

Ref. instruction of assembling : 0904DA091E
Ref. instruction of operation : 0904DA098E
Mounting & assembly guides are available on our website.

DIMENSIONS				
DN	40	50	65	80
A (mm)	95	115	125	135
D (mm)	150	165	185	200
G (mm)	95	115	125	135
H (mm)	208	231	258	288
O	1"1/2	2"	2"1/2	3"
Weight (Kg)	7.400	9.750	13.440	18.510
S Inlet (mm²)	881.4	1385.4	1963.5	3217.0
S Oulet (mm²)	1578.7	2521.0	4095.0	5661.0

These data are for information and can be modified without notice. It is not up to us to appreciate specifications. It is up to the customer to verify the adequacy between the equipment choosen and the real conditions of use.